PROPOSED INTERFACE REVISION NOTICE (PIRN) to ICD-GPS-200C for Letters of Exception (LOE) Update

PIRN-200C-008
Revision A

7 June 2004

Distribution A. Approved for public release; distribution unlimited.

ARINC Engineering Services, LLC
2250 E. Imperial Highway, Ste. 450
El Segundo, CA 90245

Description of Change

1. The change items in this PIRN are; (1) removal of all Letters of Exception (LOEs), except for one, and incorporation of contents of technical LOEs into the text of ICD-GPS-200, (2) ~~update~~*deletion* of calendar year data requirement~~ to all blocks of SV~~, (3) clarification of applicable UTC/GPS-time relationships, (4) clarification of t_{oa} value update in the nav message, (5) clarification of t_{oe} offset for new upload cutover, *(6) changes to IODC values and data set lengths,* and (7~~6~~) other general clean up and editorial update.

Rev A

2. It should be noted that attached proposed changes to ICD-GPS-200 paragraphs 6.2.2.2.3, 6.3.3, 6.3.4, 20.3.2, 20.3.3.3.1.3, 20.3.3.5.2.2 are due to Martin Marietta LOE on page 61 of ICD-GPS-200, while changes to paragraphs 20.3.3.5.1, 20.3.3.5.1.1, 20.3.3.5.1.2, 20.3.3.5.1.3, and Table 20-V are due to IBM LOE on page 59 of ICD-GPS-200. These changes have been previously coordinated with LMSSC, AFSPC/DRN, and LMM&DS as Draft PIRN-200C-005.

3. The proposed changes are described in this PIRN as follows;

   deletion - strikeout,

   addition - italic.

   The changes are described using the extracts from ICD-GPS-200C with IRN-200C-001 & IRN-200C-002 & IRN-200C-003 & IRN-200C-004 & IRN-200C-005R1.

PIRN-200C-008A
ICD-GPS-200C
7 June 2004

3.2.2 NAV Data. The NAV data, D(t), includes SV ephemerides, system time, SV clock behavior data, status messages and C/A to P (or Y) code handover information, etc. The 50 bps data is Modulo-2 added to the P(Y)- and C/A- codes; the resultant bit-trains are used to modulate the L1 and L2 carriers. For a given SV, the data train D(t), if present, is common to the P(Y)- and C/A- codes on both the L1 and L2 channels. The content and characteristics of the NAV data, D(t), are given in Appendix II of this document.

For Block IIR-M, the NAV data, D(t), is also Modulo-2 added to the L2 CM-code. However, the NAV data, D(t), can be used in one of two different data rates which are selectable by ground command. D(t) with a data rate of 50 bps can be commanded to be Modulo-2 added to the L2 CM-code, or D(t) with a symbol rate of 50 symbols per second (sps) (rate ½ convolutional encode of a 25 bps NAV data) can be commanded to be Modulo-2 added to the L2 CM-code. The resultant bit-train is combined with L2 CL-code using *chip by chip* time-division multiplexing method *(i.e. alternating between L2 CM ⊕ data and L2 CL chips).* ~~and the~~*This* multiplexed bit-train~~s~~ ~~are~~*is* used to modulate the L2 carrier.

The above described (and throughout this document) NAV data, D(t), and its modulation onto the L2 CM-code for Block IIR-M may change prior to operational broadcast of L2 C signal.

For Block IIF, and subsequent blocks of SVs, L2 CNAV data, $D_C(t)$, also includes SV ephemerides, system time, SV clock behavior, status messages, etc. The $D_C(t)$ is a 25 bps data stream which is coded by a rate ½ convolutional coder. When selected by ground command, the resulting 50 sps symbol stream is Modulo-2 added to the L2 CM-code; the resultant bit-train is combined with L2 CL-code using *chip by chip* time-division multiplexing method *(i.e. alternating between L2 CM ⊕ data and L2 CL chips)*; the multiplexed bit-train~~s are~~ *is* used to modulate the L2 carrier. The content and characteristics of the L2 CNAV data, $D_C(t)$, are given in Appendix III of this document.

3.2.3 L1/L2 Signal Structure. The L1 ~~link~~ consists of two carrier components which are in phase quadrature with each other. Each carrier component is bi-phase shift key (BPSK) modulated by a separate bit train. One bit train is the Modulo-2 sum of the P(Y)-code and NAV data, D(t), while the other is the Modulo-2 sum of the C/A-code and the NAV data, D(t). For Block II/IIA and IIR, the L2 ~~link~~ is BPSK modulated by only one of those two bit trains; the bit train to be used for L2 modulation is selected by ground command. A third modulation mode is also selectable on the L2 channel by ground command: it utilizes the P(Y)-code without the NAV data as the modulating signal. For a particular SV, all transmitted signal elements (carriers, codes and data) are coherently derived from the same on-board frequency source.

For Block IIR-M SVs, the L2 consists of two carrier components. One carrier component is BPSK modulated by the bit train which is the Modulo-2 sum of the P(Y)-code with or without NAV data D(t), while the other is BPSK modulated by any one of four other bit trains which are selectable by ground command. The four possible bit trains are~~:~~; (1) the Modulo-2 sum of the C/A-code and D(t); (2) the C/A-code with no data; (3) a chip-by-chip time multiplex combination of bit trains consisting of the L2 CM-code with D(t) at 50 bps and the L2 CL-code with no data and; (4) a chip-by-chip time multiplex combination of bit trains consisting of the L2 CM-code with convolutionally encoded D(t) (50 sps) and the L2 CL-code with no data. The L2 CM-code with D(t) is time-multiplexed with L2 CL-code at a 1023 kHz rate *as described in paragraph 3.2.2*. The first L2 CM-code chip starts synchronously with the end/start of week epoch. Rev A

For Block IIF, and subsequent blocks of SVs, the L2 consists of two carrier components. One carrier component is BPSK modulated by the bit train which is the Modulo-2 sum of the P(Y)-code with or without NAV data D(t), while the other is BPSK modulated by any one of three other bit trains which are selectable by ground command. The three possible bit trains are~~:~~; (1) the Modulo-2 sum of the C/A-code and D(t); (2) the C/A-code with no data and; (3) a chip-by-chip time multiplex combination of bit trains consisting of the L2 CM-code with $D_C(t)$ and the L2 CL-code with no data. The L2 CM-code with the 50 sps symbol stream of $D_C(t)$ is time-multiplexed with L2 CL-code at a 1023 kHz rate *as described in paragraph 3.2.2*. The first L2 CM-code chip starts synchronously with the end/start of week epoch. Rev A

The different configuration and combination of codes/signals specified in this section are shown in Table 3-IIA.

3.3.3 Navigation Data. The content and format of the NAV data, D(t), and the L2 CNAV data, $D_C(t)$, are given in Appendices II and III, respectively, of this document.

3.3.3.1 Navigation Data Modulation. For Block IIF, the L2 CNAV bit train, $D_C(t)$, is rate ½ encoded and, thus, clocked at 50 sps. The resultant symbol sequence is then Modulo-2 added to the L2 CM-code. For Block IIR-M, upon ground command, the NAV bit train, D(t), can be rate ½ encoded and be used to modulate the L2 CM-code. However, the data rate of D(t) for this purpose will be 25 bps resulting in 50 sps.

3.3.3.1.1 Forward Error Correction. The L2 CNAV bit train, $D_C(t)$, will always be Forward Error Correction (FEC) encoded by a rate 1/2 convolutional code. For Block IIR-M, the NAV bit train, D(t), can be selected to be convolutionally encoded. The resulting symbol rate is 50 sps. The convolutional coding will be constraint length 7, with a convolutional encoder logic arrangement as illustrated in Figure 3-12C. The G1 symbol is selected on the output as the first half of a 40-millisecond data bit period.

Twelve-second navigation messages broadcast by the SV are synchronized with every eighth of the SV's P(Y)-code X1 epochs. However, the navigation message is FEC encoded in a continuous process independent of message boundaries (i.e. at the beginning of each new message, the encoder registers illustrated in Figure 3-12C contains the last six bits of the previous message).

Because the FEC encoding convolves successive messages, it is necessary to define which transmitted symbol is synchronized to SV time, as follows. The beginning of the first symbol that contains any information about the first bit of a message will be synchronized to every eighth X1 epoch (referenced to end/start of week). The users' convolutional decoders will introduce a fixed delay that depends on their respective algorithms (usually 5 constraint lengths, or 35 bits), for which they must compensate to determine system time from the received signal. This convolutional decoding delay and the various relationships with the start of the data block transmission and SV time are illustrated in Figure 3-12D.

3.3.4 GPS Time and SV Z-Count. GPS time is established by the Control Segment and is referenced to ~~a~~ *Coordinated Universal Time (*UTC*)* ~~(~~as maintained by the U.S. Naval Observatory *(UTC(USNO))*) zero time-point defined as midnight on the night of January 5, 1980/morning of January 6, 1980. The largest unit used in stating GPS time is one week defined as 604,800 seconds. GPS time may differ from UTC because GPS time shall be a continuous time scale, while UTC is corrected periodically with an integer number of leap seconds. There also is an inherent but bounded drift rate between the UTC and GPS time scales. The OCS shall control the GPS time scale to be within one microsecond of UTC (Modulo one second).

[para. 3.3.4 cont.] The NAV data contains the requisite data for relating GPS time to UTC. The accuracy of this data during the transmission interval shall be such that it shall relate GPS time (maintained by the MCS of the CS) to UTC (USNO) within 90 nanoseconds (one sigma). This data is generated by the CS; therefore, the accuracy of this relationship may degrade if for some reason the CS is unable to upload data to a SV. At this point, it is assumed that alternate sources of UTC are no longer available, and the relative accuracy of the GPS/UTC relationship will be sufficient for users. Range error components (e.g. SV clock and position) contribute to the GPS time transfer error, and under normal operating circumstances (two frequency time transfers from SV(s) whose navigation message indicates a URA of eight meters or less), this corresponds to a 97 nanosecond (one sigma) apparent uncertainty at the SV. Propagation delay errors and receiver equipment biases unique to the user add to this time transfer uncertainty.

In each SV the X1 epochs of the P-code offer a convenient unit for precisely counting and communicating time. Time stated in this manner is referred to as Z-count, which is given as a 29-bit binary number consisting of two parts as follows:

a. The binary number represented by the 19 least significant bits of the Z-count is referred to as the time of week (TOW) count and is defined as being equal to the number of X1 epochs that have occurred since the transition from the previous week. The count is short-cycled such that the range of the TOW-count is from 0 to 403,199 X1 epochs (equaling one week) and is reset to zero at the end of each week. The TOW-count's zero state is defined as that X1 epoch which is coincident with the start of the present week. This epoch occurs at (approximately) midnight Saturday night-Sunday morning, where midnight is defined as 0000 hours on the ~~Universal Coordinated Time (~~UTC~~)~~ scale which is nominally referenced to the Greenwich Meridian. Over the years the occurrence of the "zero state epoch" may differ by a few seconds from 0000 hours on the UTC scale since UTC is periodically corrected with leap seconds while the TOW-count is continuous without such correction. To aid rapid ground lock-on to the P-code signal, a truncated version of the TOW-count, consisting of its 17 most significant bits, is contained in the hand-over word (HOW) of the L*1 and L2* ~~Band downlink~~ data stream; the relationship between the actual TOW-count and its truncated HOW version is illustrated by Figure 3-13.

b. The ten most significant bits of the Z-count are a Modulo 1024 binary representation of the sequential number assigned to the current GPS week (see paragraph 6.2.4). The range of this count is from 0 to 1023 with its zero state being defined as the GPS week number zero and every integer multiple of 1024 weeks, thereafter (i.e. 0, 1024, 2048, etc.).

6. NOTES

6.1 Acronyms

AI	-	Availability Indicator
AODO	-	Age of Data Offset
A-S	-	Anti-Spoofing
Autonav	-	Autonomous Navigation
BPSK	-	Bi-Phase Shift Key
cps	-	cycles per second
CRC	-	Cyclic Redundancy Check
CS	-	Control Segment
DN	-	Day Number
EAROM	-	Electrically Alterable Read-Only Memory
ECEF	-	Earth-Centered, Earth-Fixed
ECI	-	Earth-Centered, Inertial
EOE	-	Edge-of-Earth
EOL	-	End of Life
ERD	-	Estimated Range Deviation
FEC	-	Forward Error Correction
GPS	-	Global Positioning System
HOW	-	Hand-Over Word
ICC	-	Interface Control Contractor
ICD	-	Interface Control Document
ID	-	Identification
IERS	-	*International Earth Rotation and Reference Systems Service*
IODC	-	Issue of Data, Clock
IODE	-	Issue of Data, Ephemeris
IRM	-	*IERS Reference Meridian*
IRP	-	*IERS Reference Pole*
ISC	-	Inter-Signal Correction
LSB	-	Least Significant Bit
LSF	-	Leap Seconds Future
L2 C	-	L2 Civil Signal
L2 CL	-	L2 Civil-Long Code
L2 CM	-	L2 Civil-Moderate Code
L2 CNAV	-	L2 C Navigation

Rev A

MCS	-	Master Control Station
MSB	-	Most Significant Bit
NAV	-	Navigation
NDUS	-	Nudet Detection User Segment
NMCT	-	Navigation Message Correction Table
NSC	-	Non-Standard C/A-Code
NSCL	-	Non-Standard L2 CL-Code
NSCM	-	Non-Standard L2 CM-Code
NSY	-	Non-Standard Y-code
OBCP	-	On-Board Computer Program
OCS	-	Operational Control *System*~~Segment~~
PRN	-	Pseudo-Random Noise
RF	-	Radio Frequency
RMS	-	Root Mean Square
SA	-	Selective Availability
SEP	-	Spherical Error Probable
sps	-	symbols per second
SS	-	Space Segment
SV	-	Space Vehicle
SVN	-	Space Vehicle Number
TBD	-	To Be Determined
TBS	-	To Be Supplied
TLM	-	Telemetry
TOW	-	Time Of Week
UE	-	User Equipment
URA	-	User Range Accuracy
URE	-	User Range Error
US	-	User Segment
USNO	-	U.S. Naval Observatory
UTC	-	Coordinated Universal Time
WGS 84	-	World Geodetic System 1984
WN	-	Week Number
WN_e	-	Extended Week Number

6.2.2.2.1 Block II SVs. The first block of full scale operational SVs developed by Rockwell International are designated as SVNs 13-21 and are termed "Block II" SVs. These SVs were designed to provide 14 days of positioning service without contact from the CS.

6.2.2.2.2 Block IIA SVs. The second block of full scale operational SVs developed by Rockwell International are designated as SVNs 22-40 and are termed "Block IIA" SVs. These SVs were designed to provide 180 days of positioning service without contact from the CS.

6.2.2.2.3 Block IIR SVs. The block of operational replenishment SVs developed by *Lockheed* Martin ~~Marietta~~ are designated as SVNs 41-61 and are termed "Block IIR" SVs. These SVs *have the capability of storing at least 60 days of navigation data with current memory margins, while operating in a IIA mode, to provide positioning service without contact from the CS for that period. (Contractual requirements for these SVs specify transmission of correct data for only 14 days to support short-term extended operations while in IIA mode.)*~~will provide at least 14 days of positioning service without contact from the CS when the SVs are operating in the Block IIA mode and~~*The IIR SV* will provide a minimum of 180 days of positioning service without contact from the CS when operating in autonomous navigation (Autonav) mode. Rev A

6.2.2.2.4 Block IIR-M SVs. The subset of operational replenishment SVs developed by Lockheed Martin which are “Modernized” configuration of “Block IIR” SVs are termed “Block IIR-M”.

6.2.2.2.5 Block IIF SVs. The block of operational replenishment SVs developed by Boeing are designated as SVNs 62-73 and are termed “Block IIF” SVs. This is the first block of operational SVs that transmit the L5 Civil signal. *These SVs will provide at least 60 days of positioning service without contact from the CS.* Rev A

6.2.3 Operational Interval Definitions. The following three operational intervals have been defined. These labels will be used to refer to differences in the interface definition as time progresses from SV acceptance of the last navigation data upload.

6.2.3.1 Normal Operations. The SV is undergoing normal operations whenever the fit interval flag (reference paragraph 20.3.3.4.3.1) is zero.

6.2.3.2 Short-term Extended Operations. The SV is undergoing short-term extended operations whenever the fit interval flag is one and the IODE (reference paragraph 20.3.4.4) is less than 240.

6.2.3.3 Long-term Extended Operations. The SV is undergoing long-term extended operations whenever the fit interval flag is one and the IODE is in the range 240-255.

6.2.4 GPS Week Number. The GPS week numbering system is established with week number zero (0) being defined as that week which started with the X1 epoch occurring at midnight UTC(USNO) on the night of January 5, 1980/ morning of January 6, 1980. The GPS week number continuously increments by one (1) at each end/start of week epoch without ever resetting to zero. Users must recognize that the week number information contained in the Nav Message may not necessarily reflect the current full GPS week number (see paragraphs 20.3.3.3.1.1, 20.3.3.5.1.7, 20.3.3.5.2.4, and 30.3.3.1.1.1).

6.2.5 ~~Calendar Year. The calendar year used for the calendar year counter (see paragraph 20.3.3.5.1.13) is the year number from the Gregorian Calendar.~~*DELETED.* Rev A

6.2.6 ~~GPS Day. The GPS day used for the calendar year counter (see paragraph 20.3.3.5.1.13) is 57600 X1 epochs in duration. The start of the GPS day is the start of the UTC(USNO) day minus the UTC(USNO) GPS correction for that particular UTC(USNO) day.~~*DELETED.* Rev A

6.2.7 L5 Civil Signal. L5 is the GPS downlink signal at a nominal carrier frequency of 1176.45 MHz. The L5 signal is only available on Block IIF and subsequent blocks of SVs and the signal is specified/described in a separate and different interface control document.

6.3 Supporting Material

6.3.1 Received Signals. The guaranteed minimum user-received signal levels are defined in paragraph 3.3.1.6. As additional supporting material, Figure 6-1 illustrates an example variation in the minimum received power of the near-ground user-received L1 and L2 signals from Block II/IIA/IIR SVs as a function of SV elevation angle.

6.3.3 Block IIA Mode (Block IIR/IIR-M). The Block IIR/IIR-M SVs, when operating in the Block IIA mode, will perform similarly to the Block IIA SVs and *have the capability of storing at least 60 days of navigation data, with current memory margins, to provide positioning service without contact from the CS for that period (through short-term and long-term extended operations). (Contractual requirements for these SVs specify transmission of correct data for only 14 days to support short-term extended operations while in IIA mode.)*~~will provide at least 14 days of positioning service (through short-term extended operations) without contact from the CS.~~ *Under normal conditions, the CS will provide daily uploads to each SV, which will allow the SV to maintain normal operations as defined in paragraph 6.2.3.1 and described within this ICD.*

If the CS is unable to upload the SVs (the CS is unavailable or the SV is unable to accept and process the upload), each SV will individually transition to short-term extended operations and eventually to long-term extended operations (based on time from each SV's last upload) as defined in paragraph 6.2.3.2 and 6.2.3.3, and as further described throughout this ICD. As time from upload continues through these three operational intervals, the user range error of the SV will increase, causing a positioning service accuracy degradation.

Rev A

6.3.4 Autonomous Navigation Mode. The Block IIR/IIR-M and Block IIF SV, in conjunction with a sufficient number of other Block IIR/IIR-M or Block IIF SVs, operates in an Autonav mode when commanded by the CS. Each Block IIR/IIR-M/IIF SV in the constellation determines its own ephemeris and clock correction parameters via SV-to-SV ranging, communication of data, and on-board data processing which updates data uploaded by the CS. In the Autonav mode the Block IIR/IIR-M/IIF SV will maintain normal operations as defined in paragraph 6.2.3.1 and as further described within this ICD, and will have a user range error *(URE) of no larger than 6 meters, one sigma* for Block IIR/IIR-M. *URE of 6 meters, one sigma, is expected*~~that is at or below a level required~~ to support 16 meter SEP accuracy *under a nominal position dilution of precision.* If the CS is unable to upload the SVs, the Block IIR/IIR-M SVs will maintain normal operations for period of at least 180 days after the last upload and the Block IIF SVs will maintain normal operations for period of at least 60 days.

In the Autonav mode, the almanac data, UTC parameters and ionospheric data are still calculated and maintained current by the CS and uploaded to the SV as required. If the CS is unable to upload the SVs, the almanac data, UTC parameters and ionospheric data will not be maintained current and will degrade in accuracy from the time of the last upload.

Space Systems Division
Rockwell International Corporation
2600 Westminster Boulevard
P.O. Box 3644
Seal Beach, California 90740-7644

Rockwell
International

In reply refer to 93MA3728

Date: September 22, 1993

To: The ARINC Companies
11770 E. Warner Ave., Suite 210
Fountain Valley, CA 92708

Subject: Rockwell International Letter of Exception to ICD-GPS-200 PIRN-200A-006NC, dated November 21,1986.

Attention: Thomas R. Denigan

Reference: ARINC Companies FAX dated September 20, 1993, T. R. Denigan to D. L. Butler, same subject.

It is Rockwell's position that the statement requested in the subject letter of exception be incorporated, as written, in the next revision to ICD-200. The 'B' revision of ICD-200 incorporated only the last portion of the requested change "....the initialization vector for X2A is 100100100101 and for X2B is 010101010100." It is felt that the first portion of the sentence, "Using the same convention identified for X1A and X1B,..." will aid the reader of the ICD in understanding the derivation of the X2A and X2B terms.

ROCKWELL INTERNATIONAL
Space Systems Division

Signature on file	Signature on file
W. L. Young, Manager	F. E. Cooper, Chief Engineer
Contracts & Proposals	GPS Program

cc: D. L. Butler
W. F. Fratzke

Figure 10-1. Letter of Exception (sheet 1 of 15)

~~Collins Avionics & Communications Division~~
~~Rockwell International Corporation~~
~~350 Collins Road NE~~
~~Cedar Rapids, IA 52498~~
~~(319) 395-1000~~

~~Rockwell International~~

~~September 23, 1993~~

~~ARINC Research Corporation~~
~~11770 Warner Avenue, Suite 210~~
~~Fountain Valley, CA 92708~~

~~Attention: Mr. Tom Denigan~~

~~Subject: Review of ICD-GPS-200B Outstanding Letters of Exception in Preparation of ICD-GPS-200C~~

~~Dear Mr. Denigan:~~

~~A review of Rockwell International's Collins Avionics & Communications Division, outstanding Letters of Exception as listed in IRN-200B-007 to ICD-GPS-200B shows 2 Letters of Exception that have been satisfied or are no longer pertinent:~~

~~sheet 46, (letter dated March 31, 1987)~~
~~sheet 53 & 54, (letter dated September 10, 1986)~~

~~The following letters as listed in IRN-200B-007 to ICD-GPS-200B are still pertinent and are to be included in any revised ICD-GPS-200 releases:~~

~~sheet 54a, 54c (letter dated March 27, 1991)~~
~~sheet 56g (letter dated September 23, 1992)~~

~~Sincerely,~~

~~Signature on file~~
~~C.S. Olson~~
~~Program Manager~~

~~Figure 10-1. Letter of Exception (sheet 2 of 15)~~

~~Collins Avionics & Communications Division~~
~~Rockwell International Corporation~~
~~350 Collins Road NE~~
~~Cedar Rapids, IA 52498~~
~~(319) 395-1000~~

~~Rockwell~~
~~International~~

~~2458b/0048b~~

~~March 27, 1991~~

~~ARINC Research Corporation~~
~~4410 East Fountain Blvd., Suite 100~~
~~Colorado Springs, CO 80916~~

~~Attention: Ms. Cheryl Abendschan~~

~~Subject: Rockwell CACD Letter of Exception against PIRN-200B-001B (as corrected by ARINC memo on typos and oversights, 19 MAR 91)~~

~~The subject PIRN-200B-001B documents the extended navigation capabilities inherent in the Space Segment/User Segment interface as a result of the incorporation of mission package software release OR5.10 into the Control Segment. CACD's approval of this PIRN, which indicates concurrence that the PIRN accurately reflects the as-built Control and Space Segments in the area of extended navigation, is given with exception.~~

~~CACD takes exception because:~~

~~1. The extended navigation capabilities documented by the PIRN are not a requirement of the GPS Phase III User Equipment (UE) contract F04701-85-C-0038, the GPS UE Phase IV contract F04701-90-C-0092, or the GPS MAGR Contract F04701-91-C-0003. Therefore, the GPS User Equipment, which has been and will be developed under these contracts, do no operate in compliance with extended navigation.~~

~~2. While we may technically comment on the impact to the UE as a result of OR5.10 implementation, we cannot (as PIRN approval might otherwise indicate) verify that OR5.10 implements the extended navigation requirements identified in the PIRN.~~

~~In summary, "Long Term Extended" operations from 15 to 180 days following an upload from the Control Segment are not supported by the Phase III GPS UE. Attachment 1 contains the detailed comments on the PIRN items to which CACD takes exception.~~

~~Sincerely,~~

~~Signature on file~~
~~J. L. Arnold~~
~~GPS Programs Manager~~

~~Enclosure~~
~~cc: Lt. Jim Dagley~~
~~Capt. Greg Laushine~~

~~Figure 10-1. Letter of Exception (sheet 3 of 15)~~

~~ATTACHMENT 1~~

~~Rockwell CACD Exceptions to PIRN-200B-001B~~

~~PIRN ITEM~~	~~Rockwell CACD Comment~~
~~17, 18~~	~~These PIRN items document the change in the definition of the Week Number in subframe 1, word 3 due to the implementation of long term extended ephemeris curve fits which cross GPS week boundaries. The new definition states that the week number is the ten most significant bits of the Z-count and will represent the GPS week of the start of the data set transmission interval. Previously, the week number always represented the current GPS week of transmission. CACD takes exception to this redefinition because:~~ ~~1. The PIRN introduces an inconsistency with the definition of Z-count given in paragraph 3.3.4, page 33 which states that "the ten most significant bits of the Z-count are a binary representation of the sequential number assigned to the present GPS week (Module 1024)."~~ ~~2. Since the GPS week being transmitted by the Space Segment could vary from SV to SV (depending upon time of upload) and since the transmitted GPS week could be different from the current GPS week by one week starting on day 29 after an upload, the GPS UE could navigate using the wrong GPS week. Use of the wrong GPS week could cause navigation interruptions and could result in the incorrect time-tagging of the satellite data. The user could therefore be provided with navigation data which is marked valid when, in fact, it is not valid. This is an unacceptable situation.~~
~~22,29,31, 57a, 57b,58, 60~~	~~These PIRN items document the change in the definition of the ephemeris fit interval flag for a value equal to 1 and its corresponding relationship to the IODC/IODE during extended operations. The GPS UE supports only a fit interval of 6 hours when the fit interval flag equals 1. The newly defined ephemeris fit intervals of 8, 14, 26, 50, 74, 98, 122, and 146 hours for Long Term Extended Operations are not supported and the UE will compute 6 hour curve fits whenever these are in effect.~~

~~Figure 10-1. Letters of Exception (sheet 4 of 15)~~

~~ATTACHMENT 1 (cont.)~~

~~Rockwell CACD Exceptions to PIRN-200B-001B~~

~~PIRN ITEM~~	~~Rockwell CACD Comment~~
~~39, 40, 50, 54~~	~~These PIRN items describe the almanac data sets and how the almanac URE grows throughout extended operations. The GPS UE requirements for almanac-based direct P-code TTFF (time to first fix) are only applicable to Normal Operations in which the almanac parameters have been updated within the last six days. Extended operations may jeopardize missions of those users who require efficient almanac-based direct P-code TTFFs.~~
~~43~~	~~This PIRN item documents the fact that the health summary in subframe 5, page 25 is only updated at the time of almanac upload. During extended operations the health summary may become outdated due to the length of time since the last upload.~~ ~~If the health summary becomes outdated and does not accurately reflect the status of the GPS constellation, the TTFF for the GPS UE may be delayed. This is due to the time wasted on the possible acquisition of unhealthy SVs which were marked "healthy" by the health summary. Also, attempts to acquire healthy SVs which are marked unhealthy will not be made. As a result, extended operations may jeopardize missions of those users who require efficient TTFF.~~
~~45,46~~	~~These PIRN items document the changes for the UTC parameter data sets during extended operations. The GPS UE uses the UTC parameters to provide the user with precise time. Exception is taken because:~~ ~~1. CACD is not confident that the accuracy of the UTC parameters can be maintained throughout extended operations. This accuracy is specified as 90 ns (one sigma) on ICD-GPS-200B page 32. As a result, extended operations may jeopardize missions of those users who require precise UTC.~~ ~~2. Since the GPS UE does not account for the degraded accuracy of the UTC parameters as a function of time during extended operations, the user may be provided with an incorrect estimate of his time accuracy which again may jeopardize his mission. CACD believes the UTC parameters' accuracy, as a function of time, should be specified in some GPS system specification.~~

~~Figure 10-1. Letters of Exception (sheet 5 of 15)~~

~~Collins Avionics & Communications Division~~
~~Rockwell International Corporation~~
~~350 Collins Road NE~~
~~Cedar Rapids, IA 52498~~
~~(319) 395-1000~~

~~Rockwell International~~

~~September 23, 1992~~

~~ARINC Research Corporation~~
~~11770 Warner Avenue, Suite 210~~
~~Fountain Valley, CA 92708~~

~~Attention: Mr. Peter Fyfe~~

~~Subject: PIRN-200B-009A Rockwell CACD Letter of Exception~~

~~Dear Mr. Fyfe:~~

~~The subject PIRN-200B-009A which documents the changes to the Space Segment/User Segment interface for the Block IIR SVs is hereby approved by Rockwell CACD with the following exception:~~

> ~~The PIRN states that UTC parameters (PIRN items 4, 20), ionospheric model parameters (PIRN items 21, 27a), and almanac data (PIRN items 22a, 22b) will degrade when the Block IIR SVs do not receive an upload from the Control Segment. Since the IIR SVs indicate "normal operations" (curve fit interval flag of 4 hours) at all times, dome user segment requirements cannot be met during "normal operations" in the absence of Control Segment uploads. These affected requirements are precise UTC time transfer and almanac based direct P-code time to first fix.~~

~~The affected User Equipment (UE) is that designed and developed by Rockwell CACD under the GPS UE Phase III Contract F04701-85-C-0038, GPS UE Phase IV Contract F04701-90-C-0092, and GPS MAGR Contract F04701-91-C-0003.~~

~~Sincerely,~~

~~Signature on file~~
~~C. S. Olson~~
~~Program Manager~~

~~CSS/jk~~

~~Figure 10-1. Letters of Exception (sheet 6 of 15)~~

~~Collins Avionics & Communications Division~~
~~Rockwell International Corporation~~
~~350 Collins Road NE~~
~~Cedar Rapids, IA 52498~~
~~(319) 395-1000~~

~~Rockwell International~~

~~June 12, 1995~~

~~ARINC Research Corporation~~
~~2250 East Imperial Highway, Suite 450~~
~~El Segundo, CA 90245-3509~~

~~Attention: Mr. Thomas Denigan~~

~~Subject: PIRN-200C-001 Rockwell CACD Letter of Exception~~

~~Enclosure: Approval sheet for PIRN-300C-001~~

~~References: ARINC Research Corporation letter dated January 16, 1995;~~
~~Subject: PIRN-200C-001 to ICD-GPS-200C~~

~~The subject PIRN-200C-001 is approved by Rockwell CACD with the following exception:~~

> ~~The effect of Item 2, "Change Section 20.3.3.5.2.2, page 121" of this PIRN is that computed almanac age in Rockwell CACD government User Equipment (UE) will be approximately 14 hours older than actual almanac age. Since almanac age computation is for display/output purposes only there is no impact to receiver operation or navigation solution accuracy. CACD computes an almanac time-of-transmission that is nominally the multiple of 2^{12} seconds truncated from 3.5 days prior to the almanac reference time, t_{oa}. Item 2 of subject PIRN-200C-001 documents the change of t_{oa} from being nominally the multiple of 2^{12} seconds truncated from 3.5 days (84 hours) after the first valid transmission time for an almanac set to being nominally the multiple of 2^{12} seconds truncated from 70 hours after the first valid transmission time for an almanac set. Therefore, Rockwell CACD government UE will compute and output an incorrect almanac age by approximately 14 hours.~~

~~Figure 10-1. Letters of Exception (sheet 7 of 15)~~

~~The second sentence of paragraph 20.3.3.5.2.2, "The almanac is updated often enough to ensure that GPS time, t, shall differ from t_{oa} by less than 3.5 days during the transmission period", must not change. This is to ensure the proper resolution of the GPS week number associated with the almanac.~~

~~Technical questions concerning this matter should be referenced to Lawrence Burns at (319)395-2616.~~

~~Sincerely,~~

~~Signature on file~~
~~Craig Olson~~
~~GPS Program Manager~~

~~Figure 10-1. Letters of Exception (sheet 8 of 15)~~

International Business Machines Corporation
800 N. Frederick Avenue
Gaithersburg, MD 20879

RD001001935
October 1, 1993

Mr. Tom Denigan
ARINC Research Corporation
11770 Warner Avenue, suite 210
Fountain Valley, CA 92780

Subject: IBM "Letter of Exception" against ICD-GPS-200B as Modified by IRN-200B-001B

Reference:
1. ICD-GPS-200B, dated November 30, 1987
2. IRN-200B-001B, dated April 15,, 1991
3. IRN-200B-002, dated July 26, 1991
4. IRN-200B-003, dated December 2, 1991
5. IRN-200B-004, dated December 5, 1991
6. IRN-200B-005, dated December 16, 1991
7. IRN-200B-006, dated December 9, 1992
8. IRN-200B-007, dated July 19, 1993
9. IBM letter 020689-2, dated February 6, 1989
10. Contract F04701-90-C-0009

Dear Mr. Denigan:

With the release of the referenced IRN-200B-001B through -007, this letter represents the current IBM letter of exception against ICD-GPS-200B, replacing Reference 9.

The IBM contract does not support the following:

Block I end of data transmission (Paragraph 20.3.2)

The option of repeated almanacs for 12 or fewer SVs (Paragraphs 20.3.3.5.1.2, 20.3.3.5.1.3)

The use of pages 2, 3, 4, 5, 7, 8, 9, and 10 of subframe 4 for purpose other than almanac data for SVs 25 through 32 (Paragraphs 20.3.3.5.1, 20.3.3.5.1.1, 20.3.3.5.1.3, Table 20-V)

Figure 10-1. Letters of Exception (sheet 9 of 15)

~~-2-~~

~~Mr. Tom Denigan RD001001935~~
~~October 1, 1993~~

~~Questions and coordination related to the technical content of ICD-GPS-200 should be addressed to Ming Kang Chien at 301/240-6449.~~

~~Very truly yours,~~

~~Signature on file~~
~~Magdalena V. Clyne~~
~~Contract Administrator~~

~~cc: Capt. B. Schrimsher, SMC/CZGD 1~~
~~Lt. R. Layton, SMC/CZET 1~~

~~Figure 10-1. Letters of Exception (sheet 10 of 15)~~

MARTIN MARIETTA ASTRO SPACE
POST OFFICE BOX 8555
PHILADELPHIA, PENNSYLVANIA 19101

17 August 1994
GPS IIR-CM-1046

ARINC Research Corporation
2250 E. Imperial Highway, Suite 450
El Segundo, CA 90245-3509

Attention: Ms. Pat Alexander

Subject: Approval of ICD-GPS-200, Revision C

Reference: Contract F04701-89-C-0073
ICD-GPS-200, Revision C dated 10 October 1993

Dear Ms. Alexander:

Martin Marietta Astro Space approves with exception ICD-GPS-200, Revision C as evidenced by the attached signed approval sheet. The areas of exception are both general and specific in nature.

General Areas of Exceptions

Martin Marietta takes exception to specific changes in requirements originally conveyed in IRN Nos. IRN-200B-001, IRN-200B-004, IRN-200B-005, and IRN-200B-006 of ICD-GPS-200B. The principal reason for these exceptions is that Martin Marietta's contract does not include requirements for Extended Navigation, User Range Accuracy bin structure, some aspects of the Time of Almanac requirements and the Spherical Error Probability of the navigation signals received by the navigation users. Detailed reasons for these exceptions are given below.

1. Extended Navigation
   Martin Marietta takes exception to the application of Extended Navigation (EN) requirements, or the attribution of EN performance or EN performance verification to the Block IIR SV. Such application or attribution may inadvertently be construed from the overall context.

   The Block IIA operational mode called Long Term Extended Operations/"Extended Navigation" is undefined and not required in the Block IIR contract. There is no Block IIR requirement to support 180 days in the Block IIA mode without regular CS contacts and uploads. The Block IIR contract defines the Block IIA mode in the context of ICD-GPS-200B dated 30 November 1987 which describes a 14 day autonomy capability.

Figure 10-1. Letters of Exception (sheet 11 of 15)

- ~~The Block IIR design supports 180 day autonomy in the context of the Autonomous Navigation mode and 14 day autonomy in the Block IIA mode. It may be possible to construct upload databases that will allow operation beyond 14 days with the current design, but this is not a current requirement. The Block IIR Space Vehicle does not support such an upload design, performance description, and performance verification.~~

- ~~Section 20.3.2, sentence 2 states "Block IIR SVs are designed to have sufficient memory to store 182 days of upload NAV data in the Block IIA mode ..." Martin Marietta takes exception to a "182 day" NAV data storage requirement in the Block IIA mode. The Block IIR design and validation plan is required to provide performance and memory margin computed on 14 day storage in the IIA mode as defined in Section 20.3.4.4 and 20.3.4.5 of the ICD-GPS-200B dated 30 November 1987.~~

- ~~Sections 20.3.4.4 and 20.3.4.5 with new Tables 20-XII and 20-XIII, define different "days spanned", "fit intervals", and "transmission intervals" compared to the 30 November 1987 ICD-GPS-200B. These changes are generated by some of the Extended Navigation upload characteristics for the Block IIA SV which supports "182 days" of data. Martin Marietta takes exception to evaluation and validation of the Block IIR design performance under these modified sections and tables.~~

2. ~~URA Bin Structure~~

- ~~Martin Marietta takes exception to items relating to URA index to ranges of URA in meters appears to require the Block IIR SV in the Autonomous Navigation (AN) mode to transition from on index to the next at exactly the values of URA indicated. This specification of URA bins is not a defined requirement for Block IIR. The Block IIR AN design is based on the equations and the 'no better than' descriptions present in ICD-GPS-200B, in accordance with the Block IIR implementation.~~

- ~~When in the AN mode, the Martin Marietta design estimates URA on board the SV and converts the result to the index in the NAV user message by rearranging the equations and solving for the index. As a result, our design approximates, but does not exactly match, the description when Block IIR is in the AN mode.~~

- ~~When Block IIR is in the IIA mode, the Martin Marietta design does match the URA bin description exactly because we broadcast the index uploaded from the CS and the CS estimates URA.~~

3. ~~Spherical Error Probable (SEP)~~

- ~~Martin Marietta takes exception to the URE statement in 6.3.4 since it implies Martin Marietta responsibility to relate Block IIR URE to 16 meters SEP.~~

~~Figure 10-1. Letters of Exception (sheet 12 of 15)~~

- ~~IRN-200B-006 added section 6.3.4 on "Autonomous Navigation Mode." The third sentence states that the Block IIR SV in the Autonav mode "... will have a user range error that is at or below a level required to support 16 meter SEP accuracy." The Block IIR SV constellation, when authorized to operate in the Autonav mode, is required to provide 6 meters (1 sigma) URE. The 6 meter requirement is defined in SV Segment Specification (SS-SS-500). Martin Marietta has been advised that this independently derived 6 meter URE requirement does support the 16 meter SEP system requirement for a nominal geometric dilution of precision. The 16 meter SEP accuracy in the user equipment output is dependent on geometry of the SVs chosen by the URE for the solution. The 16 meter SEP accuracy is not a requirement for Block IIR Space Vehicle.~~

~~4. Time of Almanac (Toa)~~

- ~~Martin Marietta takes exception to paragraph 20.3.3.5.2.2, since it implies that the SV is required to ensure that time of almanac (Toa) values be the same for a given data set (when the SV health is changed by the CS) or that Toa differ for successive data sets (which contain changes in SV health). This is a CS responsibility.~~

- ~~Martin Marietta is concerned about the ambiguous CS/SV requirement to ensure that the described Toa values are presented to Users in Appendix II, paragraph 20.3.3.5.2.2.~~

- ~~ICD-GPS-200, Revision C deletes 'The CS shall ensure' in paragraph 20.3.3.5.2.2. This is a change from ICD-GPS-200B dated 11/30/87 which is applied to our contract. If so deleted, ICD-GPS-200B will be mute as to who ensures that "All Toa values in SF4&5 shall be the same for a given almanac data set and shall differ for successive data sets which contain changes in almanac parameters or SV health.'~~

- ~~The Block IIR design is not required to, and does not, affect or check Toa based on the SV health settings described by this section. The Block IIR design depends on CS uploads for SV health and the relationship of SV health data to almanac reference time.~~

- ~~In an independent process, CS uploads for Toa values and almanacs are inputs to the on-board generation of Toa values when the Block IIR design propagates almanacs to remain within 3.5 days of GPS time. If the CS provides a valid upload, the Block IIR on-board processing will maintain that all Toa values in SF4&5 will be the same for a given almanac data set and will differ for successive data sets which contain changes in almanac parameters.~~

~~Figure 10-1. Letters of Exception (sheet 13 of 15)~~

~~17 August 1994~~
~~GPS IIR-CM-1046~~
~~Page 4~~

~~Specific Exceptions~~
~~In addition, Martin Marietta takes exceptions to the specific requirements listed below:~~

Paragraph #	Description
20.3.3.3.1.1	Change of week number: Extended Navigation (EN).
Table 20-V	SV ID Nos. in Note 4 (EN).
6.2.3 - 6.2.3.3	Definitions. CS responsibility. N/A to Block-IIR.
6.3.2, 6.3.3	Extended Navigation Mode description.
6.3.4	"... and will have ... 16 meter SEP accuracy."
6.3.4	Orbit parameters. Narrative on almanac. N/A to Block-IIR.
	Martin Marietta uses ICD-GPS-401 method.
20.3.2	"... 182 days of uploaded NAV data in the Block IIA ..."
20.3.2	"(d) if a control ... subframes will indicate ID = 1 ..."
	IRN excludes Block-IIR.
20.3.3.4.1	CS requirement deleted. (Related to extended nav.).
20.3.3.5.1.2	Propagation of Toa requirements.
20.3.3.5.1.2	"For Block II ... transmission interval."
20.3.3.5.2.2	Propagation of Toa requirements.
20.3.4.1	Reqmt for subframe changes at frame boundary.
20.3.4.4	Table 20-XII: Ext. Nav related.
Table 20-XII	IODC Requirements. Ext. Nav related.
20.3.4.4	Two hour data sets are not tested.
Table 20-XII	Transmission intervals. Ext. Nav related.

~~Note that if Martin Marietta has taken earlier exception to a change in any requirements in a previous revision of this document, Martin Marietta continues to take exception to that change. The retraction of an exception will be accomplished by a letter explicitly stating that the exception is no longer valid.~~

~~If there are any questions of a technical nature concerning the contents of this letter, please contact Dave Levin at (610) 354-3022. All other questions or comments should be addressed to the undersigned at (610) 354-1710.~~

~~Very truly yours,~~
~~**MARTIN MARIETTA ASTRO SPACE**~~

~~Signature on file~~
~~D. Supow~~
~~Manager, GPS Contracts~~ ~~cc: Maj. Paul Schubert (CZEP)~~
~~GPS PMO~~

~~/dd~~

~~Figure 10-1. Letters of Exception (sheet 14 of 15)~~

~~Lockheed Martin Federal Systems, Inc.~~
~~700 N. Frederick Avenue Gaithersburg, MD 20879-3328~~
~~Telephone 301-240-7500~~

LOCKHEED MARTIN

~~In reply refer to: GOSC96000912~~

~~September 5, 1996~~

~~ARINC Research Corporation~~
~~2250 E. Imperial Highway, Suite 450~~
~~El Segundo, CA 90245-3509~~

~~Attention: Mr. Soon K. Yi~~

~~Subject: PIRN-200C-002~~

~~Reference: 1. Contract F04606-95-D-0239~~
~~2. ARINC letter RO/SMS/ES/SE/96-025, dated July 9, 1996~~

~~Dear Mr. Yi:~~

~~PIRN-200C-002 has been reviewed by Lockheed Martin Federal Systems, the Control Segment Contractor. This PIRN is approved subject to the contractual exception below:~~

~~The changes contained in this PIRN are not within the baseline of our GPS OCS Support Contract.~~

~~Enclosed is the signed approval sheet requested in the referenced letter.~~

~~If you have any questions, please contact Ming Kang Chien at (301)240-6449.~~

~~Very truly yours,~~

~~Signature on file~~
~~C. T. Thomas~~
~~Contract Administrator~~

~~Enclosure~~

~~cc: Maj. P. Schubert SMC/CZGD~~
~~Capt. F. Wylie SMC/CZEA~~
~~Capt. J. Gravitt SMC/CZE~~
~~Capt. J. Varljen SMC/CZEP~~
~~D. Munk SMC/CZGP~~
~~D. Greer SM-ALC/PKLX~~

~~Figure 10-1. Letters of Exception (sheet 15 of 16).~~

~~Government Systems~~

~~350 Collins Road NE~~
~~Cedar Rapids, Iowa 52498~~
~~Tel. 319.295.1000~~

~~Rockwell~~
~~Collins~~

~~August 27, 1999~~

~~ARINC Incorporated~~
~~2250 East Imperial Highway, Suite 450~~
~~El Segundo, CA 90245-3509~~

~~Attention: Mr. Soon K. Yi~~

~~Reference: ARINC memo ATE/SMS/OPS/GJP/99-038, dated 28 July 99~~

~~Dear Mr. Yi:~~

~~Subject: Rockwell Collins, Inc. Letter of Exception against PIRN-200C-003~~
~~Revision A, as defined by the referenced ARINC memo~~

~~The subject PIRN documents the use of an Earth Centered Inertial (ECI) frame to define the location of the satellites and account for satellite motion during signal transit time. There are also numerous typo corrections. Also the Navigation Message Correction Term (NMCT), also commonly referred to as WAGE, is partially covered.~~

~~Rockwell Collins approves this PIRN with the following exceptions:~~

~~1) Implementation of older style corrections for satellite motion during signal transit time (paragraph 20.3.3.4.3.3 and 20.3.3.4.3.4) shall be permitted in User Equipment.~~

~~2) Use of NMCT data (paragraph 20.3.3.5.2.6) is not mandatory and will be determined by the manufacturers of User Equipment, based on required accuracy.~~

~~Sincerely,~~

~~Signature on file~~
~~A. Caslavka, Director~~
~~Navigation Systems~~

~~js~~

~~Figure 10-1. Letters of Exception (sheet 16 of 16).~~

Lockheed Martin Space Systems Company
Space & Strategic Missiles
Valley Forge Operations
P.O. Box 8555 Philadelphia, PA 19101

LOCKHEED MARTIN

26 May 2003
GPS IIR-CM-MOD-147

SMC/CZK
2420 VELA WAY, SUITE 1467
LOS ANGELES AFB CA 90245-4659

Attention: Mr. David Smith

Subject: GPS Block IIR Modernization Contract F04701-00-C-0006
Review and approval of ICD-GPS-PIRN-200C-007B, dated 08 November 2003, post 9 April 2003 CCB (L2C = -160).

Reference: 1) PCOL# 03-012, dated 22 May 03; F04701-00-C-0006; REQUEST FOR IMPACTS DUE TO IMPLEMENTING PROPOSED CHANGES TO PIRN-200C-007 REVISION B

Dear Mr. Smith:

Lockheed Martin Space Systems Company has been asked to review and comment on changes made to ICD-GPS-PIRN-200C-007B at the JPO CCB boarded on or about 09 April 2003. It is our understanding that the ONLY change made to the 08 November 2002 of the subject ICD is L2C for IIR-M SVs changed from –161.4 dBW to –160.0 dBW.

Based on that change, Lockheed Martin takes exception to IIR-M L2 C signal power specified in Table 3-III. Per Lockheed Martin contract requirements as specified in SS-SS-500, Rev. A, dated 14 May 2001, LMSSC calculates links using:

- 0-dBi circularly polarized user receiving antenna (located) near ground when the SV is above a 5° elevation angle
- Atmospheric loss of 0.5 dB at edge of earth
- Assumes SV antenna gains are averaged about azimuth

Using the assumptions as specified in paragraph 3.3.1.6 of PIRN-200C-007B, the GPS IIRM SVs provide a minimum receive signal of -161.4 dBW for L2 C signal. Lockheed Martin therefore takes exception to -160 dBW for L2C of PIRN-200c-007B. Formal request for cost and schedule impacts should come through the JPO Contracting Officer.

To change from -161.4 dBW to -160.0 dBW would have to be analyzed and coordinated between Lockheed Martin and ITT. If such a change were technically possible, there would be impacts to L-Band level testing, SV level testing, test scripts, Specs, OOH, and various ICDs. These impacts would be in both cost and schedule.

Figure 10-1. Letters of Exception ~~(sheet 17 of 18)~~.

GPS IIR-CM-MOD-147
Page 2

Currently, there is an ongoing effort between Lockheed Martin, Boeing, Arinc, Aerospace, and the JPO concerning signal flexibility under the ConOps study. Lockheed Martin recommends, based on the outcome and direction of this effort, that an impact to the ICD-200 change be included in the resulting request for ROMs for Flex Power implementation.

Note that if Lockheed Martin has taken earlier exception to a change in any requirements in a previous revision of this document, Lockheed Martin continues to take exception to that change. A letter explicitly stating that the exception is no longer valid will accomplish the retraction of an exception.

Should you have any questions, please contact Martin O'Connor at (610) 354-7866 for technical concerns, or the undersigned at (610) 354-7989 for contractual matters.

Very truly yours,

LOCKHEED MARTIN CORPORATION

Signature on file
Brent B. Achee II
GPS Block IIR Deputy Program Director

xc: Capt. K. Eggehorn
Mary Guyes
Soon Yi, ARINC
J. Windfelder, DCMC

Figure 10-1. Letters of Exception ~~(sheet 18 of 18)~~.

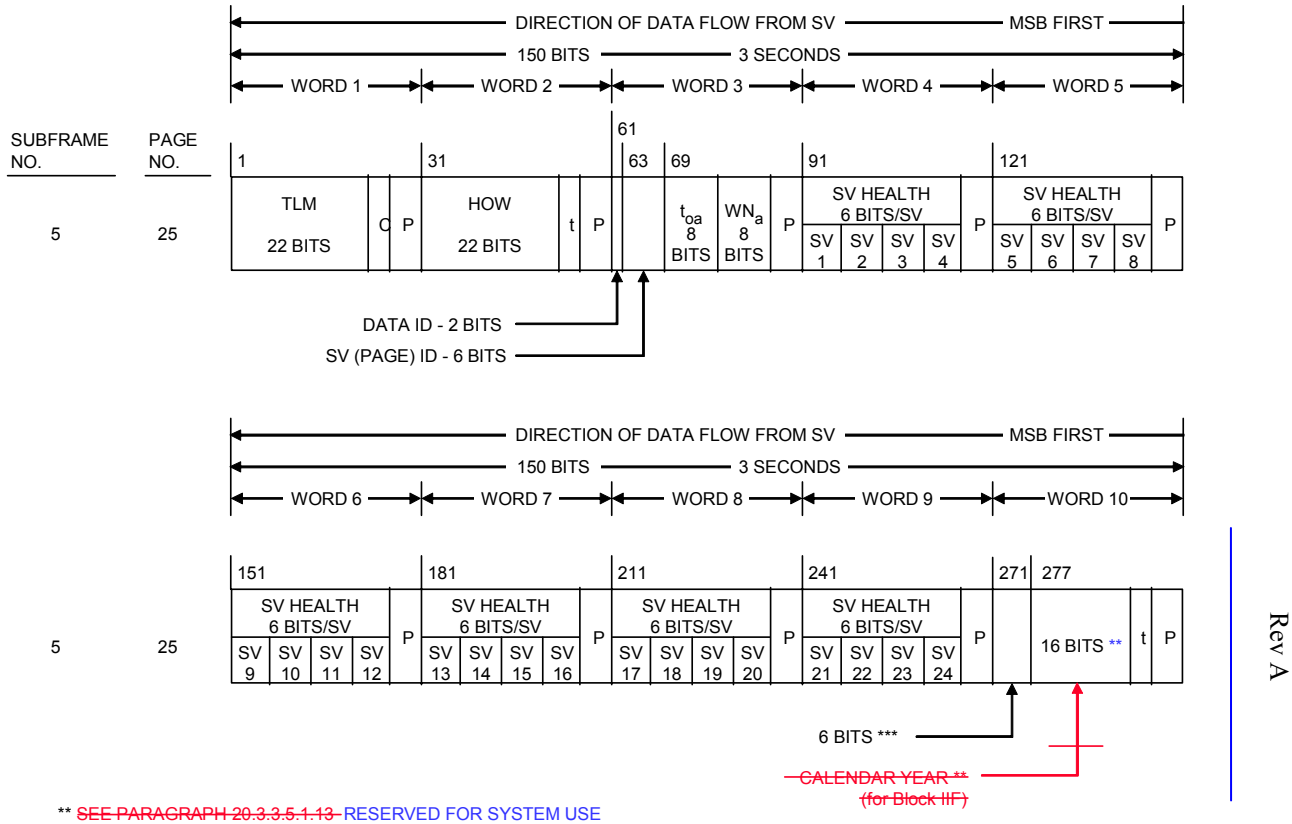

** ~~SEE PARAGRAPH 20.3.3.5.1.13~~ RESERVED FOR SYSTEM USE
*** RESERVED
P = 6 PARITY BITS
t = 2 NONINFORMATION BEARING BITS USED FOR PARITY COMPUTATION (SEE PARAGRAPH 20.3.5)
C = TLM BITS 23 AND 24 WHICH ARE RESERVED

Figure 20-1. Data Format (sheet 5 of 11)

[Section 20.3.2 cont.] Block II and IIA SVs are designed with sufficient memory capacity for storing 182 days of uploaded NAV data. However, the memory retention of these SVs will determine the duration of data transmission. Block IIR SVs ~~are designed to have sufficient memory to store 182~~*have the capability, with current memory margin, to store at least 60* days of uploaded NAV data in the Block IIA mode and to store 210 days of CS data needed to generate NAV data on-board in the Autonav mode. Alternating ones and zeros will be transmitted in words 3 through 10 in place of the normal NAV data whenever the SV cannot locate the requisite valid control or data element in its on-board computer memory. The following specifics apply to this default action: (a) the parity of the affected words will be invalid, (b) the two trailing bits of word 10 will be zeros (to allow the parity of subsequent subframes to be valid -- reference paragraph 20.3.5), (c) if the problem is the lack of a data element, only the directly related subframe(s) will be treated in this manner, (d) if a control element cannot be located, this default action will be applied to all subframes and all subframes will indicate ID = 1 (Block II/IIA only) (i.e., an ID-code of 001) in the HOW (reference paragraph 20.3.3.2) (Block IIR/IIR-M and IIF SVs indicate the proper subframe ID for all subframes). Certain failures of control elements which may occur in the SV memory or during an upload will cause the SV to transmit in non-standard codes (NSC and NSY) which would preclude normal use by the US. Normal NAV data transmission will be resumed by the SV whenever a valid set of elements becomes available.

[Section 20.3.2 cont.] Block II SVs ~~are~~*may be* uploaded with 182 days of NAV data. However, the EAROM retentivity for these SVs is designed and guaranteed for only 14 days. Therefore, Block II SV memory is most likely to fail sometime during long-term extended operations after repeated write operations. In the case of memory failure, the SV will transmit alternating ones and zeros in word 3-10 as specified in the above paragraph. Rev A

Block IIA SVs ~~are~~*may* also *be* uploaded with 182 days of data. However, the EAROM retentivity for these SVs is designed and guaranteed for 180 days. Rev A

The memory retentivity for the Block IIR/IIR-M SVs is designed and guaranteed for 210 days.

The memory retentivity for the Block IIF SVs is designed and guaranteed for 90 days.

Although the data content of the SVs will be temporarily reduced during the upload process, the transmission of valid NAV data will be continuous. The data capacity of specific operational SVs may be reduced to accommodate partial memory failures.

20.3.3.3.1.3 SV Accuracy. Bits 13 through 16 of word three shall give the URA index of the SV (reference paragraph 6.2.1) for the unauthorized user. *Except for Block IIR/IIR-M SVs in the Autonav mode, ~~T~~the* URA index (N) is an integer in the range of 0 through 15 and has the following relationship to the URA of the SV:

URA INDEX	URA (meters)		
0	0.00	< URA ≤	2.40
1	2.40	< URA ≤	3.40
2	3.40	< URA ≤	4.85
3	4.85	< URA ≤	6.85
4	6.85	< URA ≤	9.65
5	9.65	< URA ≤	13.65
6	13.65	< URA ≤	24.00
7	24.00	< URA ≤	48.00
8	48.00	< URA ≤	96.00
9	96.00	< URA ≤	192.00
10	192.00	< URA ≤	384.00
11	384.00	< URA ≤	768.00
12	768.00	< URA ≤	1536.00
13	1536.00	< URA ≤	3072.00
14	3072.00	< URA ≤	6144.00
15	6144.00	< URA	(or no accuracy prediction is available - unauthorized users are advised to use the SV at their own risk.)

For each URA index (N), users may compute a nominal URA value (X) as given by:

- If the value of N is 6 or less, $X = 2^{(1 + N/2)}$,
- If the value of N is 6 or more, but less than 15, $X = 2^{(N - 2)}$,
- N = 15 shall indicate the absence of an accuracy prediction and shall advise the unauthorized user to use that SV at his own risk.

For N = 1, 3, and 5, X should be rounded to 2.8, 5.7, and 11.3 meters, respectively.

For Block IIR/IIR-M SVs in the Autonav mode, the URA shall be defined to mean "no better than X meters", with "X" as defined above for each URA index

20.3.3.3.3.2 L1 - L2 Correction. The L1 and L2 correction term, T_{GD}, is initially calculated by the CS to account for the effect of SV group delay differential between L1 P(Y) and L2 P(Y) based on measurements made by the SV contractor during SV manufacture. The value of T_{GD} for each SV may be subsequently updated to reflect the actual on-orbit group delay differential. This correction term is only for the benefit of "single-frequency" (L1 P(Y) or L2 P(Y)) users; it is necessitated by the fact that the SV clock offset estimates reflected in the a_{f0} clock correction coefficient (see paragraph 20.3.3.3.3.1) are based on the effective PRN code phase as apparent with two frequency (L1 P(Y) and L2 P(Y)) ionospheric corrections. Thus, the user who utilizes the L1 P(Y) signal only shall modify the code phase offset in accordance with paragraph 20.3.3.3.3.1 with the equation

$$(\Delta t_{SV})_{L1P(Y)} = \Delta t_{SV} - T_{GD}$$

where T_{GD} is provided to the user as subframe 1 data. For the user who utilizes L2 P(Y) only, the code phase modification is given by

$$(\Delta t_{SV})_{L2P(Y)} = \Delta t_{SV} - \gamma T_{GD}$$

where, denoting the nominal center frequencies of L1 and L2 as f_{L1} and f_{L2} respectively,

$$\gamma = (f_{L1}/f_{L2})^2 = (1575.42/1227.6)^2 = (77/60)^2.$$

The value of T_{GD} is not equal to the mean SV group delay differential, but is a measured value that represents the mean group delay differential multiplied by $1/(1-\gamma)$. That is,

$$T_{GD} = \frac{1}{1-\gamma}\,(t_{L1P(Y)} - t_{L2P(Y)})$$

where $t_{LiP(Y)}$ is the GPS time the ith frequency P(Y) signal *(a specific epoch of the signal)* is transmitted from the SV *antenna phase center*.

Rev A

[Section 20.3.3.5.1 cont.] A brief summary of the various data contained in each page of subframes 4 and 5 is as follows:

a. Subframe 4:

- Pages 1, 6, 11, 16 and 21: (reserved);
- Pages 2, 3, 4, 5, 7, 8, 9 and 10: almanac data for SV 25 through 32 respectively~~. These pages may be designated for other functions; the format and content for each page is defined by the SV ID of that page. In this case, the six bit health word of page 25 is set to "6 ones" (Refer to 20.3.3.5.1.3) and the SV ID of the page will not have a value in the range of 25 through 32~~;
- Pages 12, 19, 20, 22, 23 and 24: (reserved);
- Page 13: NMCT;
- Pages 14 and 15: reserved for system use;
- Page 17: special messages;
- Page 18: ionospheric and UTC data;
- Page 25: A-S flags/SV configurations for 32 SVs, plus SV health for SV 25 through 32.

b. Subframe 5:

- Pages 1 through 24: almanac data for SV 1 through 24;
- Page 25: SV health data for SV 1 through 24, the almanac reference time, the almanac reference week number~~, and the calendar year counter (for Block IIF)~~.

Rev A

20.3.3.5.1.1 Data ID and SV ID. The two MSBs of word three in each page shall contain data ID. Data ID number two (denoted by binary code 01) denotes the NAV data structure of D(t) which is described in this Appendix. Future data IDs will be defined as necessary.

As shown in Table 20-V, the data ID is utilized to provide one of two indications: (a) for those pages which are assigned to contain the almanac data of one specific SV, the data ID defines the data structure utilized by that SV whose almanac data are contained in that page; and (b) for all other pages, the data ID denotes the data structure of the transmitting SV.

The SV ID is given by bits three through eight of word three in each page as shown in Table 20-V. Specific IDs are reserved for each page of subframes 4 and 5~~; however, the SV ID of pages 2, 3, 4, 5, 7, 8, 9 and 10 of subframe 4 may change for each page to reflect the alternate contents for that page~~. The SV IDs are utilized in two different ways: (a) for those pages which contain the almanac data of a given SV, the SV ID is the same number that is assigned to the PRN code phase of that SV (reference Table 3-I), and (b) for all other pages the SV ID assigned in accordance with Table 20-V serves as the "page ID". IDs 1 through 32 are assigned to those pages which contain the almanac data of specific SVs (pages 1-24 of subframe 5 and pages 2-5 and 7-10 of subframe 4). The "0" ID (binary all zeros) is assigned to indicate a dummy SV, while IDs 51 through 63 are utilized for pages containing other than almanac data of a specific SV. The remaining IDs (33 through 50) are unassigned.

Pages which carry the same SV ID (e.g., in subframe 4, pages 1, 6, 11, 16 and 21 carry an ID of 57, while pages 12 and 24 are designated by an ID of 62) may not be considered to contain identical data. The data in the pages with the same SV ID can be different.

Table 20-V. Data IDs and SV IDs in Subframes 4 and 5

Page	Subframe 4		Subframe 5	
	Data ID	SV ID*	Data ID	SV ID*
1	Note(2)	57	Note(1)	1
2 ~~Note(3)~~	Note(1)	25	Note(1)	2
3 ~~Note(3)~~	Note(1)	26	Note(1)	3
4 ~~Note(3)~~	Note(1)	27	Note(1)	4
5 ~~Note(3)~~	Note(1)	28	Note(1)	5
6	Note(2)	57	Note(1)	6
7 ~~Note(3)~~	Note(1)	29	Note(1)	7
8 ~~Note(3)~~	Note(1)	30	Note(1)	8
9 ~~Note(3)~~	Note(1)	31	Note(1)	9
10 ~~Note(3)~~	Note(1)	32	Note(1)	10
11	Note(2)	57	Note(1)	11
12	Note(2)	62	Note(1)	12
13	Note(2)	52	Note(1)	13
14	Note(2)	53	Note(1)	14
15	Note(2)	54	Note(1)	15
16	Note(2)	57	Note(1)	16
17	Note(2)	55	Note(1)	17
18	Note(2)	56	Note(1)	18
19	Note(2)	58 Note(*43*)	Note(1)	19
20	Note(2)	59 Note(*43*)	Note(1)	20
21	Note(2)	57	Note(1)	21
22	Note(2)	60 Note(*43*)	Note(1)	22
23	Note(2)	61 Note(*43*)	Note(1)	23
24	Note(2)	62	Note(1)	24
25	Note(2)	63	Note(2)	51

* Use "0" to indicate "dummy" SV. When using "0" to indicate dummy SV, use the data ID of the transmitting SV.

Note 1: Data ID of that SV whose SV ID appears in that page.
Note 2: Data ID of transmitting SV.
~~Note 3: Pages 2, 3, 4, 5, 7, 8, 9, and 10 of subframe 4 may contain almanac data for SVs 25 through 32, respectively, or data for other functions as identified by a different SV ID from the value shown.~~
Note ~~4~~*3*: SV ID may vary *(except for IIR/IIR-M SVs)*.

Rev A

20.3.3.5.1.2 Almanac Data. Pages 1 through 24 of subframe 5, as well as pages 2 through 5 and 7 through 10 of subframe 4 contain the almanac data and a SV health word for up to 32 SVs (the health word is discussed in paragraph 20.3.3.5.1.3). The almanac data are a reduced-precision subset of the clock and ephemeris parameters. The data occupy all bits of words three through ten of each page except the eight MSBs of word three (data ID and SV ID), bits 17 through 24 of word five (SV health), and the 50 bits devoted to parity. The number of bits, the scale factor (LSB), the range, and the units of the almanac parameters are given in Table 20-VI. The algorithms and other material related to the use of the almanac data are given in paragraph 20.3.3.5.2.

The almanac message for any dummy SVs shall contain alternating ones and zeros with valid parity.~~ For twelve or fewer SVs, almanacs may be repeated within the 25 cycle subcommutation limit. Whenever this option is exercised, the following constraints shall apply: (a) each page of subframes 4 and 5, which is assigned by Table 20-V to one of the active SVs in orbit, must contain the almanac data of that SV to which it is assigned by Table 20-V, (b) those almanac type pages which remain unused per the above rule, shall then be re-assigned to carry a duplicate set of almanac data for the active orbiting SV, (c) these page re-assignments shall be in ascending order of page numbers (starting with subframe 5, followed by subframe 4) being used for SVs having an ascending order of SV IDs, and (d) each re-assigned page must carry the SV ID of that SV whose almanac data it contains.~~

The almanac parameters shall be updated by the CS at least once every 6 days while the CS is able to upload the SVs. If the CS is unable to upload the SVs, the accuracy of the almanac parameters transmitted by the SVs will degrade over time.

For Block II and IIA SVs, three sets of almanac shall be used to span 182 days. The first and second sets will be transmitted for up to six days each; the third set is intended to be transmitted for the ~~duration~~*remainder* of the 182 days~~ from the last upload~~, but the *actual* duration of transmission will depend on the individual SV's capability to retain data in memory. All three sets are based on six-day curve fits that correspond to the first six days of the transmission interval. For Block IIR/IIR-M and IIF SVs, multiple sets of almanac parameters shall be uploaded to span 210 days and 90 days, respectively.

20.3.3.5.1.3 SV Health. Subframes 4 and 5 contain two types of SV health data: (a) each of the 32 pages which contain the clock/ephemeris related almanac data provide an eight-bit SV health status word regarding the SV whose almanac data they carry, and (b) the 25th page of subframe 4 and of subframe 5 jointly contain six-bit health status data for up to 32 SVs.

The three MSBs of the eight-bit health words indicate health of the NAV data in accordance with the code given in Table 20-VII. The six-bit words provide a one-bit summary of the NAV data's health status in the MSB position in accordance with paragraph 20.3.3.3.1.4. The five LSBs of both the eight-bit and the six-bit words provide the health status of the SV's signal components in accordance with the code given in Table 20-VIII. A special meaning is assigned, however, to the "6 ones" combination of the six-bit health words in the 25th page of subframes 4 and 5: it indicates that "the SV which has that ID is not available and there may be no data regarding that SV in that page of subframes 4 and 5 that is assigned to normally contain the almanac data of that SV" (NOTE: ~~(a)~~ this special meaning applies to the 25th page of subframes 4 and 5 only~~; and (b) there may be data regarding another SV in the almanac page referred to above as defined in paragraph 20.3.3.5.1.1~~). The health indication shall be given relative to the "as designed" capabilities of each SV (as designated by the configuration code -- see paragraph 20.3.3.5.1.6). Accordingly, any SV which does not have a certain capability will be indicated as "healthy" if the lack of this capability is inherent in its design or it has been configured into a mode which is normal from a user standpoint and does not require that capability.

Additional SV health data are given in subframe 1. The data given in subframes 1, 4, and 5 of the other SVs may differ from that shown in subframes 4 and/or 5 since the latter may be updated at a different time.

The eight-bit health status words shall occupy bits 17 through 24 of word five in those 32 pages which contain almanac data for individual SVs. The six-bit health status words shall occupy the 24 MSBs of words four through nine in page 25 of subframe 5 plus bits 19 through 24 of word 8, the 24 MSBs of word 9, and the 18 MSBs of word 10 in page 25 of subframe 4.

The predicted health data will be updated at the time of upload when a new almanac has been built by the CS. The transmitted health data may not correspond to the actual health of the transmitting SV or other SVs in the constellation.

Rev A

~~20.3.3.5.1.13 Calendar Year Counter. For Block IIF SVs, bits 7 through 22 of word ten in page 25 of subframe 5 shall indicate the calendar year (reference paragraph 6.2.5). The CS shall ensure that this counter shall increment at the start of the GPS day (reference paragraph 6.2.6) corresponding to calendar January 1st.~~

~~Note that for other blocks of SVs, bits 7 through 22 of word ten in pages 25 of subframe 5 do not provide calendar year counter. For these other blocks of SVs, the 16 bits nominally provide alternating ones and zeros.~~

20.3.3.5.2 Algorithms Related to Subframe 4 and 5 Data. The following algorithms shall apply when interpreting Almanac, Universal Coordinated Time, Ionospheric Model, and NMCT data in the NAV message.

20.3.3.5.2.1 Almanac. The almanac is a subset of the clock and ephemeris data, with reduced precision. The user algorithm is essentially the same as the user algorithm used for computing the precise ephemeris from the one subframe 1, 2, and 3 parameters (see Table 20-IV). The almanac content for one SV is given in Table 20-VI. A close inspection of Table 20-VI will reveal that a nominal inclination angle of 0.30 semicircles is implicit and that the parameter δ_i (correction to inclination) is transmitted, as opposed to the value computed by the user. All other parameters appearing in the equations of Tables 20-IV, but not included in the content of the almanac, are set to zero for SV position determination. In these respects, the application of the Table 20-IV equations differs between the almanac and the ephemeris computations.

20.3.3.5.2.2 Almanac Reference Time.

Within each upload, the CS shall ensure that ~~A~~*a*ll t_{oa} values in subframes 4 and 5 shall be the same for a given almanac data set and shall differ for successive data sets which contain changes in almanac parameters or SV health. *In addition, the Block IIR/IIR-M SVs will also ensure that, based on a valid CS upload, all t_{oa} values in subframes 4 and 5 will be the same for a given almanac data set and will differ for successive data sets which contain changes in almanac parameters.*

Note that cutover to a new upload may continue to indicate the same t_{oa} values in subframes 4 and 5 as prior to the cutover but the new almanac data set may contain changes in almanac parameters or SV health. Note *also* that cutover to a new upload may occur between the almanac pages of interest and page 25 of subframe 5 (reference paragraph 20.3.4.1), and thus there may be a temporary inconsistency between t_{oa}, in the almanac page of interest, and in word 3 of page 25 of subframe 5. The t_{oa} mismatch signifies that this WN_a may not apply to the almanac of interest and that the user must not apply almanac data until the pages with identical values of t_{oa} are obtained.

Rev A

Normal and Short-term Extended Operations. The almanac reference time, t_{oa}, is some multiple of 2^{12} seconds occurring approximately 70 hours after the first valid transmission time for this almanac data set (reference 20.3.4.5). The almanac is updated often enough to ensure that GPS time, t, shall differ from t_{oa} by less than 3.5 days during the transmission period. The time from epoch t_k shall be computed as described in Table 20-IV, except that t_{oe} shall be replaced with t_{oa}.

Long-term Extended Operations. During long-term extended operations or if the user wishes to extend the use time of the almanac beyond the time span that it is being transmitted, one must account for crossovers into time spans where these computations of t_k are not valid. This may be accomplished without time ambiguity by recognizing that the almanac reference time (t_{oa}) is referenced to the almanac reference week (WN_a), both of which are given in word three of page 25 of subframe 5 (see paragraph 20.3.3.5.1.7).

20.3.3.5.2.3 Almanac Time Parameters. The almanac time parameters shall consist of an 11-bit constant term (a_{f0}) and an 11-bit first order term (a_{f1}). The applicable first order polynomial, which shall provide time to within 2 microseconds of GPS time (t) during the interval of applicability, is given by

$$t = t_{sv} - \Delta t_{sv}$$

where

t = GPS system time (seconds),

t_{sv} = effective SV PRN code phase time at message transmission time (seconds),

Δt_{sv} = SV PRN code phase time offset (seconds).

The SV PRN code phase offset is given by

$$\Delta t_{sv} = a_{f0} + a_{f1}\, t_k$$

where the computation of t_k is described in paragraph 20.3.3.5.2.2, and the polynomial coefficients a_{f0} and a_{f1} are given in the almanac. Since the periodic relativistic effect is less than 25 meters, it need not be included in the time scale used for almanac evaluation. Over the span of applicability, it is expected that the almanac time parameters will provide a statistical URE component of less than 135 meters, one sigma. This is partially due to the fact that the error caused by the truncation of a_{f0} and a_{f1} may be as large as 150 meters plus 50 meters/day relative to the t_{oa} reference time.

During extended operations (short-term and long-term) the almanac time parameter may not provide the specified time accuracy or URE component.

20.3.3.5.2.4 ~~Universal~~ Coordinated *Universal* Time (UTC). Page 18 of subframe 4 includes: (1) the parameters needed to relate GPS time to UTC, and (2) notice to the user regarding the scheduled future or recent past (relative to NAV message upload) value of the delta time due to leap seconds (Δt_{LSF}), together with the week number (WN_{LSF}) and the day number (DN) at the end of which the leap second becomes effective. "Day one" is the first day relative to the end/start of week and the WN_{LSF} value consists of eight bits which shall be a Modulo 256 binary representation of the GPS week number (see paragraph 6.2.4) to which the DN is referenced. The user must account for the truncated nature of this parameter as well as truncation of WN, WN_t, and WN_{LSF} due to rollover of full week number (see paragraph 3.3.4(b)). The CS shall manage these parameters such that*, when Δt_{LS} and Δt_{LSF} differ,* the absolute value of the difference between the untruncated WN and WN_{LSF} values shall not exceed 127.

[Section 20.3.3.5.2.4 cont.] Depending upon the relationship of the effectivity date to the user's current GPS time, the following three different UTC/GPS-time relationships exist:

a. Whenever the effectivity time indicated by the WN_{LSF} and the DN values is not in the past (relative to the user's present time), and the user's present time does not fall in the time span which starts at ~~DN + 3/4~~*six hours prior to the effectivity time* and ends at ~~DN + 5/4~~*six hours after the effectivity time*, the UTC/GPS-time relationship is given by

$$t_{UTC} = (t_E - \Delta t_{UTC}) \text{ [Modulo 86400 seconds]}$$

where t_{UTC} is in seconds and

Δt_{UTC}	=	$\Delta t_{LS} + A_0 + A_1 (t_E - t_{ot} + 604800 (WN - WN_t))$, seconds;
t_E	=	GPS time as estimated by the user ~~on the basis of~~*after* correcting t_{SV} for factors described in paragraph 20.3.3.3.3 as well as for ~~ionospheric and~~ selective availability (SA) (dither) effects;
Δt_{LS}	=	delta time due to leap seconds;
A_0 and A_1	=	constant and first order terms of polynomial;
t_{ot}	=	reference time for UTC data (reference 20.3.4.5);
WN	=	current week number (derived from subframe 1);
WN_t	=	UTC reference week number.

The estimated GPS time (t_E) shall be in seconds relative to end/start of week. During the normal and short-term extended operations, the reference time for UTC data, t_{ot}, is some multiple of 2^{12} seconds occurring approximately 70 hours after the first valid transmission time for this UTC data set (reference 20.3.4.5). The reference time for UTC data (t_{ot}) shall be referenced to the start of that week whose number (WN_t) is given in word eight of page 18 in subframe 4. The WN_t value consists of eight bits which shall be a Modulo 256 binary representation of the GPS week number (see paragraph 6.2.4) to which the t_{ot} is referenced. The user must account for the truncated nature of this parameter as well as truncation of WN, WN_t, and WN_{LSF} due to rollover of full week number (see paragraph 3.3.4(b)). The CS shall manage these parameters such that the absolute value of the difference between the untruncated WN and WN_t values shall not exceed 127.

[Section 20.3.3.5.2.4 cont.]

b. Whenever the user's current time falls within the time span of ~~DN + 3/4~~*six hours prior to the effectivity time* to ~~DN + 5/4~~*six hours after the effectivity time*, proper accommodation of the leap second event with a possible week number transition is provided by the following expression for UTC:

$$t_{UTC} = W[\text{Modulo } (86400 + \Delta t_{LSF} - \Delta t_{LS})], \text{ seconds;}$$

where

$$W = (t_E - \Delta t_{UTC} - 43200)[\text{Modulo } 86400] + 43200, \text{ seconds;}$$

and the definition of Δt_{UTC} (as given in 20.3.3.5.2.4a above) applies throughout the transition period. Note that when a leap second is added, unconventional time values of the form 23:59:60.xxx are encountered. Some user equipment may be designed to approximate UTC by decrementing the running count of time within several seconds after the event, thereby promptly returning to a proper time indication. Whenever a leap second event is encountered, the user equipment must consistently implement carries or borrows into any year/week/day counts.

c. Whenever the effectivity time of the leap second event, as indicated by the WN_{LSF} and DN values, is in the "past" (relative to the user's current time), *and the user's current time does not fall in the time span as given above in 20.3.3.5.2.4b,* the relationship previously given for t_{UTC} in 20.3.3.5.2.4a above is valid except that the value of Δt_{LSF} is substituted for Δt_{LS}. The CS will coordinate the update of UTC parameters at a future upload so as to maintain a proper continuity of the t_{UTC} time scale.

20.3.4.4 Data Sets. The IODE is an 8 bit number equal to the 8 LSBs of the 10 bit IODC of the same data set. The following rules govern the transmission of IODC and IODE values in different data sets: (1) The transmitted IODC will be different from any value transmitted by the SV during the preceding seven days; (2) The transmitted IODE will be different from any value transmitted by the SV during the preceding six hours. The range of IODC will be as given in Table 20-XII *for Block II/IIA SVs and Table 20-XIIA for Block IIR/IIR-M/IIF SVs*.

Rev A

Cutovers to new data sets will occur only on hour boundaries except for the first data set of a new upload. The first data set may be cut-in (reference paragraph 20.3.4.1) at any time during the hour and therefore may be transmitted by the SV for less than one hour. During short-term operations, cutover to 4-hour sets and subsequent cutovers to succeeding 4-hour data sets will always occur Modulo 4 hours relative to end/start of week. Cutover from 4-hour data sets to 6-hour data sets shall occur Modulo 12 hours relative to end/start of week. Cutover from 12-hour data sets to 24-hour data sets shall occur Modulo 24 hours relative to end/start of week. Cutover from a data set transmitted 24 hours or more occurs on a Modulo 24-hour boundary relative to end/start of week.

The start of the transmission interval for each data set corresponds to the beginning of the curve fit interval for the data set. Each data set remains valid for the duration of its curve fit interval.

Table 20-XII. IODC Values and Data Set Lengths *(Block II/IIA)*

Days Spanned	Transmission Interval (hours) (Note 5)	Curve Fit Interval (hours)	IODC Range (Note 1)
1	2 ~~(Note 4)~~	4	(Note 2)
2-14	4	6	(Note 2)
15-16	6	8	240-247
17-20	12	14	248-255, 496 (Note 3)
21-27	24	26	497-503
28-41	48	50	504-510
42-59	72	74	511, 752-756
60-*63*~~87~~	96	98	757~~-763~~
~~88-122~~	~~120~~	~~122~~	~~764-767, 1008-1010~~
~~123-182~~	~~144~~	~~146~~	~~1011-1020~~

Note 1: For transmission intervals of 6 hours or greater, the IODC values shown will be transmitted in increasing order.

Note 2: IODC values for blocks with ~~1 ,~~ 2- or 4-hour transmission intervals (at least the first 14 days after upload) shall be any numbers in the range 0 to 1023 excluding those values of IODC that correspond to IODE values in the range 240-255, subject to the constraints on re-transmission given in paragraph 20.3.4.4.

Note 3: The ninth 12-hour data set may not be transmitted.

Note 4: *Deleted.*~~Some SVs will have transmission intervals of 1 hour per paragraph 20.3.4.4.~~

Note 5: The first data set of a new upload may be cut-in at any time and therefore the transmission interval may be less than the specified value.

Rev A

Rev A

Rev A

Rev A

Rev A

Table 20-XII*A*. IODC Values and Data Set Lengths *(Block IIR/IIR-M/IIF)*

Days Spanned	Transmission Interval (hours) (Note 5)	Curve Fit Interval (hours)	IODC Range ~~(Note 1)~~
1	2 (Note 4)	4	(Note 2)
2-14	4	6	(Note 2)
15-16	6	8	240-247 *(Note 1)*
17-20	12	14	248-255, 496 *(Note 1)* (Note 3)
21-*182*~~27~~ *(Note 6)*	24	26	497-503*, 1021-1023*
~~28-41~~	~~48~~	~~50~~	~~504-510~~
~~42-59~~	~~72~~	~~74~~	~~511, 752-756~~
~~60-87~~	~~96~~	~~98~~	~~757-763~~
~~88-122~~	~~120~~	~~122~~	~~764-767, 1008-1010~~
~~123-182~~	~~144~~	~~146~~	~~1011-1020~~

Note 1: For transmission intervals of 6 *and 12* hours ~~or greater~~, the IODC values shown will be transmitted in increasing order.

Note 2: IODC values for blocks with 1-, 2- or 4-hour transmission intervals (at least the first 14 days after upload) shall be any numbers in the range 0 to 1023 excluding those values of IODC that correspond to IODE values in the range 240-255, subject to the constraints on re-transmission given in paragraph 20.3.4.4.

Note 3: The ninth 12-hour data set may not be transmitted.

Note 4: ~~Some~~ SVs *operating in the Autonav mode* will have transmission intervals of 1 hour per paragraph 20.3.4.4.

Note 5: The first data set of a new upload may be cut-in at any time and therefore the transmission interval may be less than the specified value.

Note 6: Block IIF span will be 62 days.

Rev A Rev A Rev A Rev A Rev A Rev A

[Section 20.3.4.5 cont.]

Epoch	Application Algorithm Reference
t_{oc}	20.3.3.3.3.1
t_{oe}	20.3.3.4.3
t_{oa}	20.3.3.5.2.2 and 20.3.3.5.2.3
t_{ot}	20.3.3.5.2.4

Table 20-XIII describes the nominal selection which will be expressed Modulo 604,800 seconds in the Navigation Message.

The coefficients of expansion are obviously dependent upon choice of epoch, and thus the epoch time and expansion coefficients must be treated as an inseparable parameter set. Note that a user applying current navigation data will normally be working with negative values of $(t-t_{oc})$ and $(t-t_{oe})$ in evaluating the expansions.

The CS shall assure that the t_{oe} value, for at least the first data set transmitted by an SV after a new upload, is different from that transmitted prior to the cutover (see paragraph 20.3.4.4). As such, when a new upload is cutover for transmission, ~~T~~*t*he CS ~~will~~*shall* introduce *a* small deviation~~s~~ *in*~~from~~ the ~~nominal~~ *t_{oe} resulting in the t_{oe} value that is offset from the hour boundaries (see Table 20-XIII)*~~if necessary to preclude possible data set transition ambiguity when a new upload is cut over for transmission~~. *This offset t_{oe} will be transmitted by an SV in the first data set after a new upload cutover and the second data set, following the first data set, may also continue to reflect the same offset in the t_{oe}.*

When the t_{oe}, immediately prior to a new upload cutover, already reflects a small deviation (i.e. a new upload cutover has occurred in the recent past), then the CS shall introduce an additional deviation to the t_{oe} when a new upload is cutover for transmission.

A change from the *broadcast* reference time *immediately prior to cutover* is used to indicate a change of values in the data set. *The user may use the following example algorithm to detect the occurrence of a new upload cutover:*

$DEV = t_{oe}$ [Modulo 3600]

If $DEV \neq 0$, then a new upload cutover has occurred within past 4 hours.

Rev A

Table 20-XIII. Reference Times					
Fit Interval (hours)	Transmission Interval (hours)	Hours After First Valid Transmission Time			
		t_{oc} (clock)	t_{oe} (ephemeris)	t_{oa} (almanac)	t_{ot} (UTC)
4	2*	2	2		
6	4	3	3		
8	6	4	4		
14	12	7	7		
26	24	13	13		
50	48	25	25		
74	72	37	37		
98	96	49	49		
122	120	61	61		
146	144	73	73		
144 (6 days)	144			70	70
≥ 144 (6 days)	> *144*~~4080~~			70	70
* Some SVs will have transmission intervals of 1 hour per paragraph 20.3.4.4.					

30.3 Requirements.

30.3.1 Data Characteristics. The L2 CNAV data stream includes the same data as the L1 and L2 C/A data stream, but in an entirely different format. Also, the L2 CNAV data stream uses a different parity algorithm.

30.3.2 Message Structure. As shown in Figures 30-1 through 30-6, the L2 CNAV message structure utilizes a basic format of twelve-second 300-bit long messages. Each message contains a Cyclic Redundancy Check (CRC) parity block consisting of 24 bits covering the entire twelve-second message (300 bits) (reference Section 30.3.5). At present, only message types 1-6 are defined. Message types 7 through 63 are reserved and message type 0 *(zero)* is *defined to be* the default message. To protect users from message generation failures, the SV shall replace the content of each affected message type with the default message type. In the event that a particular message is not assigned (by the CS) a particular message type for broadcast, the SV shall generate and broadcast the default message type in that message slot.

Currently undefined and unused message types are reserved for future use. In addition, *the contents of* Message Types *1*~~7~~ through *6*~~9~~ are presently ~~undefined but are~~ *being redesigned*~~reserved~~ to be used in future broadcast of new clock and ephemeris parameters. ~~The new parameters will be different than the parameters of Message Type 1 and 2, and a~~*A*s such, the related algorithms *for the future clock and ephemeris parameters may*~~will also~~ be different than the current equations of Table 20-IV. The initial broadcast of Message Type*s* 1 *through 6*~~and 2~~*, as currently defined in this appendix,* will be for test purposes and, as such, will stop and be replaced by *redesigned m*~~M~~essage *t*~~T~~ype*s* ~~7 through 9~~ as soon as the *new*~~latter~~ message types are fully defined and implemented.

30.3.3 Message Content. Each message starts with an 8-bit preamble – 10001011, followed by a 6-bit PRN number of the transmitting SV, a 6-bit message type ID with a range of 0 (000000) to 63 (111111), and the 17-bit message time of week (TOW) count. When the value of the message TOW count is multiplied by 6, it represents SV time in seconds at the start of the next 12-second message. An "alert" flag, when raised (bit 38 = "1"), indicates to the user that the SV URA may be worse than indicated in message type 1, and the SV should be used at the user's own risk. For each default message (Message Type 0), bits 39 through 276 shall be alternating ones and zeros and the message shall contain a proper CRC parity block.